Syropy AI Connectivity

All-optical networking information modules include

All-optical networking information modules include

Optical Networking Standards: A Comprehensive Guide

These networking elements have enabled the service-providers world-wide to offer flexible yet customized bundled-services based on IP, MPLS and Carrier-Grade

Silicon Photonics in Pluggable Optics White Paper

Silicon photonics technology has long been of interest in the optical networking industry and in recent years has gained a major foothold in the data

H3C All-Optical Network Technology White Paper-6W100

H3C provides an extensive array of iOptic Ethernet switches and PON network devices, encompassing all categories of all-optical network devices from core to access.

PON modules enable high-speed data transmission over fiber optic

PON modules are vital for high-speed data transmission in fiber optic networks. They include various types like OLT, ONU, and stick, adhering to standards such as GPON and EPON.

White Paper: Management of Smart Optical Modules

Optical internetworks are data networks composed of routers and data switches interconnected by optical networking elements. With the goal of promoting worldwide compatibility of

Understanding Optical Modules

If an optical module is installed in a running device, you can run the display transceiver command to view parameters of the optical module, including the center wavelength, transmission distance, fiber

The FOA Reference For Fiber Optics

Most systems use a "transceiver" which includes both transmission and receiver in a single module. The transmitter takes an electrical input and converts it to an

Cisco Routed Optical Networking Solution Guide, Release 3.0

Powered by the industry-leading Cisco IOS® XR Software, the NCS 57C3 supports a rich and comprehensive set of features like QoS, IP/MPLS, Segment Routing, SRv6, and Ethernet VPN

Future All-optical Network Architecture and Key Technologies

New Solutions Future All-optical Network Architecture and Key Technologies Evolving towards the 2030 optical communications network system and architecture is a key issue facing the optical

All You Need to Know About Optical Network Unit

All You Need to Know About Optical Network Unit Devices LarryJun 05, 20241 min read In today's fast-paced information age, the network is a crucial

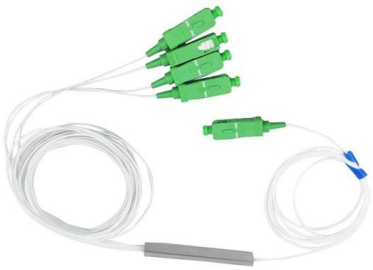

All-optical networks: principles, solutions and challenges

Great strides have been made in recent years in the area of all-optical networking in terms of networking, transmission, componentry and management. There still remain some outstanding

Toward 100Tbps and a Simplified All-

Optical Network

CSPs' priorities for their metro optical network include simplified networks with a superior client and operations experience and optimized cost. Historical networks are built over many years,

The Fiber Optic Association

Until we began, most information on fiber optics was in the form of academic textbooks, not appropriate for installers and contractors, and application notes

Cisco SFP: Unlocking the Power of Optical Transceiver

Essential system components in data networks today is the Optical Transceiver Module as it permits the sending and receiving of data to and fro

Optical module

An optical module is a typically hot-pluggable optical transceiver used in high-bandwidth data communications applications. Optical modules typically have an electrical interface on the side that

White Paper: Management of Smart Optical Modules

In this white paper we explore how the DWDM functions, parameters, and operational aspects of "smart" optical pluggable modules can be handled more efficiently in order to deal with the

Optical Transport Network (OTN) Explained: The

OTN is often described as the "digital wrapper" for optical networks. It encapsulates diverse client signals -- Ethernet, IP, Fibre Channel, SONET/SDH,

Next-generation optical networks to sustain connectivity of the future

In view of the rapid progresses in the realm of optical computing enabling the purposed interference between optical channels that are tailored to various computing capabilities, we envision

Optical Networks

In what is termed all-optical networking, signals traverse the network entirely in the optical domain, with no form of opto-electronic processing. This implies that the all signal processing- including - signal

Future All-optical Network Architecture and Key Technologies

Key technologies like all-optical interconnection, fine-grain OTN (fgOTN), and optical-layer digitalization are required to ensure high bandwidth and low latency for the optical metro network architecture.

Basics of Optical Networking , NSC

What are the main components of an optical network? The primary components of an optical network include fiber optic cables, optical transceivers, amplifiers,

SFP Module: What's It and How to Choose It?

such as switches, NIC (network interface card), and media converters. It makes SFP module necessary in fiber optical connections. SFP module has

What Is Passive Optical Networking (PON)?

Passive optical networking (PON), like active optical networking, uses fiber-optic cabling to provide Ethernet connectivity from a main data source to endpoints.

Full Guide of PON: OLT, ONT, ONU, ODN and other

In this guide, we'll break down the key components of a PON, including Optical Line Terminals (OLT), Optical Network Units (ONU), Optical

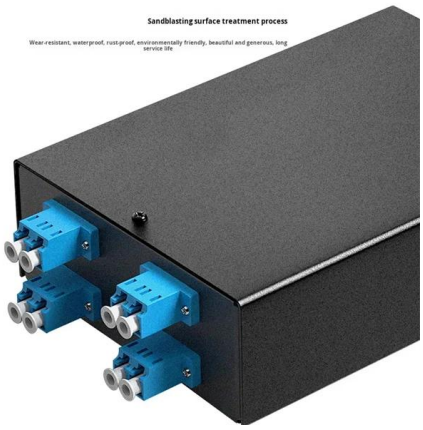

Understanding Optical Modules: Working Principles,

Explore the working principles, structures, and performance metrics of optical modules, essential components of optical fiber communication systems. Learn

Next-generation optical networks to sustain connectivity of the future

As a proof-of-efficiency for the new operational paradigm, we propose a detailed case study in formulating and solving the network coding-enabled optical networks, demonstrating the

What Is an All-Optical Network?

The main technologies used on all-optical networks include the fiber technology, Synchronous Digital Hierarchy (SDH), WDM, optical switching technology, Optical Cross-Connect

Cisco Optics , Transform Your Network

Get the highest quality, performance-leading optical transceivers for any network architecture. Find the transceiver model to fit your network.

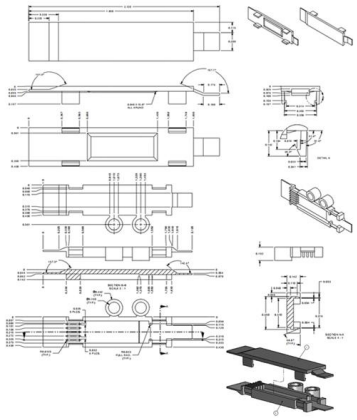

Understand GPON Technology

This document describes the Gigabit Passive Optical Network (GPON) technology and how it functions.

Optical networks

Nokia optical network solutions for transport networks with advanced coherent optical engines, scalable open optical line systems, and AI-powered automation.

Optical Networking Solutions , Analog Devices

Our optical networking product portfolio provides high-performance, reliable, and scalable optical control and power solutions to address high

Contact Us

For datasheets, pricing, or custom high-speed optical interconnect solutions, please visit:
https://syropy.com.pl