Syropy AI Connectivity

Fiber Optic Cable Sheathing Powder





Overview

PVC is restricted from use in commercial buildings, when it burns, PVC produces Cyanide.

Fiber Optic Cable Sheathing Powder



Fiber Optic Pigtail: The Complete Guide to Types, Splicing Methods

Confused about fiber optic pigtails--which connector type, which polish, fusion or mechanical splice? Our guide covers LC vs SC, APC vs UPC, splicing methods, and real-world use

om5-butterfly-shaped-fiber-optic-cable-for-nigerian

All Companies and suppliers for om5-butterfly-shaped-fiber-optic-cable-for-nigerian-overseas-warehouse Find wholesalers and contact them directly Leading B2B martketplace Find companies now!





new-zealand-hollow-core-fiber-adss Manufacturer/Producer

Fiber Optic Cables with Low Attenuation High Tensile Strength Long-Term Reliability Instrumentation Cable with RE-2X (St)YSWAY Construction - Fine-Stranded Copper Conductors - IEC EN BS VDE

Ribbon Fiber Optic Cable Market Trends and Insights

Ribbon Fiber Optic Cable Company Market Share Dominant Segment Analysis: FTTx Applications The Fiber-to-the-X (FTTx) application segment represents a primary economic driver



WebiTelecomms Cabling



Fiber Optic Cable Sheath and Water Barrier - Fosco Connect

Filling compounds are used in fiber optic cables to prevent the ingress of water into the cables. Moisture around the fiber can cause existing microcracks to propagate which can cause degradation or even

6 Fiber Cable Outer Sheath Materials and How To Choose?

Indoor fibe optic cables can be sheathed with PVC, and outdoor fiber optic cables can be sheathed with PE. When flame-retardant is required, LSZH, flame-retardant materials can be used.



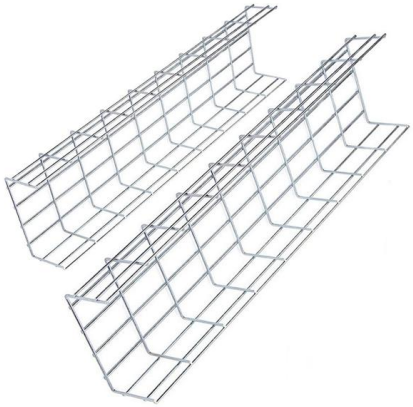

6 Core Single Mode Fiber Optic Cable

Discover 6 core single mode fiber optic cables with G657A1/A2 fiber, CE certified, for outdoor aerial use. Ideal for telecom & FTTH.

Fiber Optic Sheathing , Suppliers

Explore 9 top manufacturers and suppliers of Fiber Optic Sheathing in our comprehensive photonics buyers' guide. Nextrom is a leading global supplier of production technologies for optical fibers and



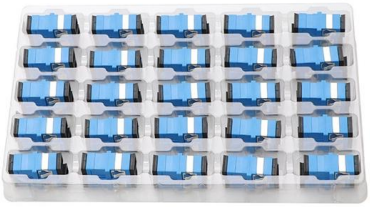

om5-butterfly-shaped-fiber-optic-cable-for-nigerian

All suppliers for om5-butterfly-shaped-fiber-optic-cable-for-nigerian-overseas-warehouse Manufacturer/Producer Find wholesalers and contact them directly B2B martketplace Find

Polymer Solutions for the Fiber Optic Industry , Zeus

Zeus manufactures polymer reinforced optical fiber and high-temperature sheathing products to support the latest fiber optic technology. We offer a wide range of fiber coating diameters and sheathing





HFFR Sheathing for Optic Fiber Cables , ECOTEK Fiber

Our excellent flame retardant sheathing/jacketing compound for optic fibre cables is specially formulated to provide superior protection against fire hazards. This

How To Choose Fiber Cable Outer Sheath Materials?

Choosing the appropriate outer sheath material for fiber optic cables is crucial for ensuring the cable's durability, protection, and performance under specific environmental conditions.





Latest Fiber Optic Technology 2025 for Faster Networks

A fiber optic network is only as strong as the cables it's built on. From the glass core to the protective sheathing, every stage of manufacturing affects

palestinian-fiber-optic-cable-connector-protection-box-manufacturer

All Companies and suppliers for palestinian-fiber-optic-cable-connector-protection-box-manufacturer Find wholesalers and contact them directly Leading B2B martketplace Find companies now!





Ethernet Cables Types: Cat 3, 5, 5e, 6, 6a, 7, 8 Wires Explained

This tutorial explains the Definition of ethernet cables, ethernet cable types, shielded cables, and Ethernet cables categories like Cat 3, 5, 5E, 6, 6a, 7, 9 ETC.

morocco-overseas-warehouse-extends-fiber-optic-cable-os2

16 Companies and suppliers for morocco-overseas-warehouse-extends-fiber-optic-cable-os2 Find wholesalers and contact them directly Leading B2B martketplace Find companies now!

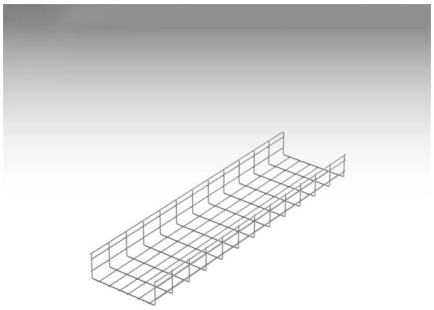

Grid Cable for marine and offshore applications



CABLE PROTECTION AND SHEATHING

This sheathing compound is used for indoor as well as multipurpose cables. They are commonly used for tight coating of fibers to produce tight buffered optical fiber cables which are mainly used for

new-zealand-hollow-core-fiber-adss

Fiber Optic Cables with Low Attenuation High Tensile Strength Long-Term Reliability Instrumentation Cable with RE-2X (St)YSWAY Construction - Fine-Stranded Copper Conductors - IEC EN BS VDE





Fiber Optic Cable Sheathing

The sheathing process is where you apply the final touch to your loose tube fiber

Say Goodbye to the Undersea Cable That Made the

History was unmade last year, as engineers began the massive project of ripping the first-ever transoceanic fiber-optic cable from the ocean floor.



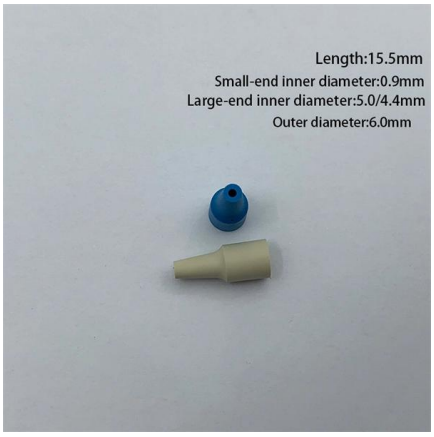

Drop+Fiber+Cable+Contact+Co.,+Ltd++86

16 Companies and suppliers for Drop+Fiber+Cable+Contact+Co.,+Ltd++86 Find wholesalers and contact them directly Leading B2B martketplace Find companies now!

fiber-optic-cable-corrugated-sheath-ip54-customs-clearance-agent

16 Companies and suppliers for fiber-optic-cable-corrugated-sheath-ip54-customs-clearance-agent Find wholesalers and contact them directly Leading B2B martketplace Find companies now!





Fiber Optic Cable Manufacturing Process: How They

Fiber optic cables are the backbone of today's high-speed internet, telecommunication systems, and data transfer technologies. Unlike traditional

palestinian-fiber-optic-cable-connector-protection-box-manufacturer

Fiber Optic Cables with Low Attenuation High Tensile Strength Long-Term Reliability Instrumentation Cable with RE-2X (St)YSWAY Construction - Fine-Stranded Copper Conductors - IEC EN BS VDE





Lifatec Fiber Sheathing

As lighting & sensing products have decreased in size and become less invasive, Lifatec has focused on developing its core processes, allowing us to manufacture the smallest, most durable cable systems

24-Core ADSS Optical Fiber Cable Price with OWIRE Solutions

Their cables feature low attenuation fibers, robust dielectric construction, and advanced UV-resistant sheathing, all designed to ensure stable signal transmission over extended distances.



Contact Us

For datasheets, pricing, or custom high-speed optical interconnect solutions, please visit:
https://syropy.com.pl