Syropy AI Connectivity

Tonga-manufactured optical cables

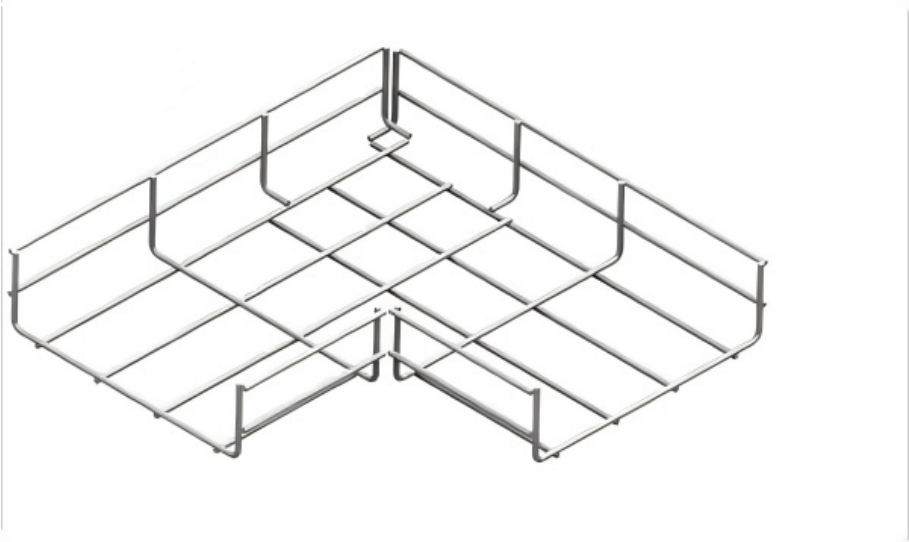

Tonga-manufactured optical cables

tonga-stainless-steel-cable-tray-prices

32 Companies and suppliers for tonga-stainless-steel-cable-tray-prices Find wholesalers and contact them directly Leading B2B martketplace Find companies now!

TTI Fiber -- Fiber Optic Cable & Connectivity Manufacturer

TTI Fiber manufactures fiber optic cables, patch cords, splitters, and connectivity solutions. ISO 9001 certified. 15 years expertise. Global shipping.

Tonga Cable Limited - Tonga

Tonga Cable Limited (TCL) owns and manages the fibre-optic submarine cable, connecting Tonga to Fiji, which was commissioned in August 2013. The cable

PAM: Tonga: Tonga-Fiji Submarine Cable Project

The Tonga-Fiji Submarine Cable Project will support the development and operation of a submarine fiber optic communication cable system linking Tonga to Fiji where an existing international

TOSLINK - Optical Audio Cable - 10ft - Designed in

High-End: This metal-free fiber optic audio cable, featuring a fully flexible PVC jacket, is entirely immune to electrical interference. Each cable undergoes multi-stage

Tonga Optical Fiber Cables Market (2025-2031) , Outlook, Restraints

Our analysts track relevent industries related to the Tonga Optical Fiber Cables Market, allowing our clients with actionable intelligence and reliable forecasts tailored to emerging regional needs.

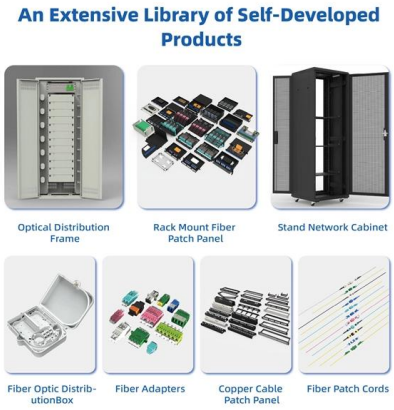

Fiber Optic Cable Manufacturer & Supplier In China

Independent Research And Production Of Optical Cables ZTO Fiber Optic Cable Company is a national high-tech enterprise specializing in the

10 Best German Fiber Optic Cable Manufacturers

Gcabling, as a professional expert with 15+ years of experience in fibre cable manufacturing industry, has specially listed 10 best German fiber cable

ExportHub: Tonga B2B Marketplace & Tongan Manufacturers Directory

ExportHub is a leading Tongan product sourcing and suppliers directory connecting Tongan manufacturers, suppliers, traders and wholesalers with worldwide buyers from the international

Connectors, Cables, Optics, RF, Silicon to Silicon Solutions

Samtec is the service leader in the electronic interconnect industry and a global manufacturer of Connectors, Cables, Optics and RF Systems, with full channel

Torn apart, missing 110km domestic fibre optic cable

Tonga's domestic fibre optic telecommunications cable was torn apart by tremendous forces and deeply buried under volcanic debris on the ocean floor.

Fiber Optic Cable,OPGW China Manufacturer& Supplier

TGC is a professional fiber optic cable China manufacturer/Supplier which provides reliable solutions for power, telecom, renewable energy and automation.

TONGA CABLE LIMITED

Find company research, competitor information, contact details & financial data for TONGA CABLE LIMITED of Sopu Nuku'alofa. Get the latest business insights from Dun & Bradstreet.

Optical Fiber Cables - BenKa Technologies

Direct from the factory As a leading manufacturer, at BenKa Technologies we design and produce a complete line of optical cables. Our range includes everything

Home

YOA Cable, Africa's largest optical fibre cable manufacturer, is known for delivering world-class optical fibre products and exceptional customer service. We anticipate market needs, innovate and

Optical fibres and cables in Tonga Trade , The Observatory of

Find the latest exports, imports and tariffs for Optical fibres and cables trade in Tonga.

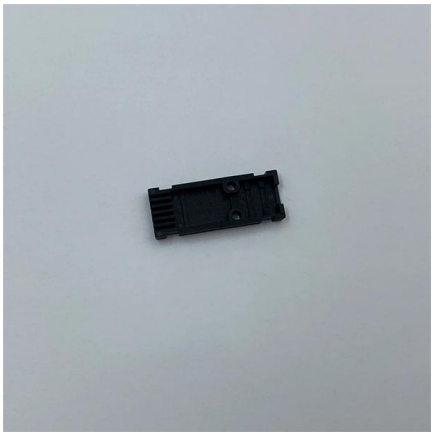

Optical cable

We offer a wide selection of multimode optical fibre cables and ribbons. Multimode fiber (50/125) is used and can be terminated in multiple styles (MT, MPO, etc.).

Fiber Optical Cable Manufacturer in China since 2000

According to its different applications, it can be categorized into duct, direct burial and aerial optical fiber cable, which include OPGW cable, figure 8 fiber cable and

10 Best Fiber Optic Manufacturers & Suppliers for 2026

The top 10 suppliers and manufacturers of optical cables in 2026. offering high-speed connectivity, durable builds, and reliable performance across

Custom Cables Solution and Assemblies Manufacturer

Koincable delivers custom cables & assemblies solutions for OEMs worldwide -- from concept to connection, with fast production, reliable quality, and engineering

Tonga Fibre Optic Cables Market (2025-2031) , Size & Industry

Market Forecast By Cable Type (Single-mode Cable, Multi-mode Cable), By Material Type (Plastics Optical Fiber, Glass Optical Fiber), By End-users (IT and Telecom, BFSI, Defense and Aerospace,

Fiber Optic Cables , Fiber Patch Cables , Patch Cords,

Fiber Patch Cables, Multimode & Singlemode Duplex Fiber Optic Cables, Secure Order Fiber Patch Cords, Preferred Mil. Edu. Gov. Pricing, Same Day Shipping

Tonga Cable: Fiji to Tonga 827 km Pacific Submarine Cable

Tonga Cable is the 827 km submarine cable linking Suva (Fiji) and Nukualofa (Tonga). Operated by Digicel Tonga and Tonga Communications, RFS 2013. Live latency.

Tonga Cable

The Tonga-Fiji Submarine Cable System (also known as Tonga Cable) is a 827km fiber optic submarine cable system linking Nuku'alofa, Tonga and Suva, Fiji, and connects to the Southern Cross Cable

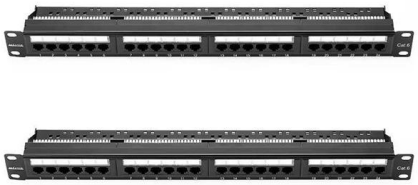

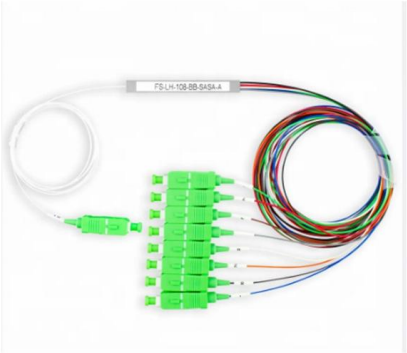

Tonga Cable Ltd , LinkedIn

Tonga Cable Limited was formed in November 2009, with approval of Government of Tonga, to build and manage a submarine fibre optic cable to connect Tonga to an international network service.

Contact Us

For datasheets, pricing, or custom high-speed optical interconnect solutions, please visit:
https://syropy.com.pl